Current part is item (3) on diagram. Available at www.oshkoshequipment.com

(1) SMR Code	(2) Federal Stock Number	(3) DESCRIPTION Reference Number & Mfr. Code	Usable On Code	UNIT of meas	(5) Qty inc. in Unit	(6) 30-day DS maint allowance (a) 1-20	(b) 21-50	(c) 51-100	(7) 30-day GS maint allowance (a) 1-20	(b) 21-50	(c) 51-100	(8) 1-yr alw per 100 equip cnt-gcy	(9) Depot maint alw per 100 equip	(10) Illustration (a) Figure No.	(b) Item No.
PAOZZ	5315-012-4553	KEY, WOODRUFF: PULLEY MTG TO SHAFT MS35756-17 (96906) GROUP 33-SPECIAL PURPOSE KITS 3301-REUSABLE SHIPPING CONTAINERS		EA	1	*	*	*	*	*	*	*	*	33	39
PAFDL	8115-027-6439	SHIPPING AND STORAGE CONTAINER: METAL, REUSABLE, ENGINE 11641663 (19207) (OPTIONAL W/ CONTAINER, 8115-967-6439)		EA	1	*	*	*	*	*	*	*	*	34	1
XADZZ		CONTAINER ASSEMBLY: UPPER SECTION 11641952 (19207)			1									34	2
PADZZ	6685-906-0156	INDICATOR: HUMIDITY 8355883 (19207)		EA	1							*	*	34	3
PADZZ	4820-620-8123	VALVE, SAFETY RELIEF: AIR 8376456 (19207)		EA	1							*	*	34	4
PADZZ	4820-242-4064	VALVE, PNEUMATIC TANK: AIR FILLING 645A6 (53477)		EA	1							*	*	34	5
PADZZ	5310-763-8920	NUT, PLAIN, HEXAGON: UPPER SECTION TO LOWER SEC-TION MTG MS51967-20 (96906)		EA	38							*	*	34	6
PADZZ	5310-820-6653	WASHER, LOCK: UPPER SECTION TO LOWER SEC-TION MTG MS35338-50 (96906)		EA	38							*	*	34	7
PADZZ	5305-051-0827	SCREW, CAP, HEXAGON HEAD: UPPER SECTION TO LOWER SEC-TION MTG MS90725-164 (96906)		EA	38							*	*	34	8
XADZZ		CONTAINER ASSEMBLY: LOWER SECTION 11641958 (19207)			1									34	9
PADZZ	5330-401-4384	SEAL, RUBBER, ROUND SEC-TION: UPPER SECTION TO LOW-ER SECTION 11641961 (19207) GROUP 47-GAGES (NON-ELECTRICAL) 4701-INSTRUMENTS		EA	1							*	*	34	10
PAOZZ	5330-011-5449	GASKET: TACHOMETER ADAPTER 115449 (24617)		EA	1	*	*	*	*	*	*	*	*	35	1
PAOZZ	6620-084-7621	ADAPTER, TACHOMETER TAKE-OFF: 10912497 (19207)		EA	1	*	*	*	*	*	*	*	*	35	2
PAOZZ	2815-995-1811	ADAPTER ASSEMBLY, TACHOMETER DRIVE: RIGHT ANGLE 11610078 (19207)		EA	1	*	*	*	*	*	*	*	*	35	3

Current part is item (3) on diagram. Available at www.oshkoshequipment.com

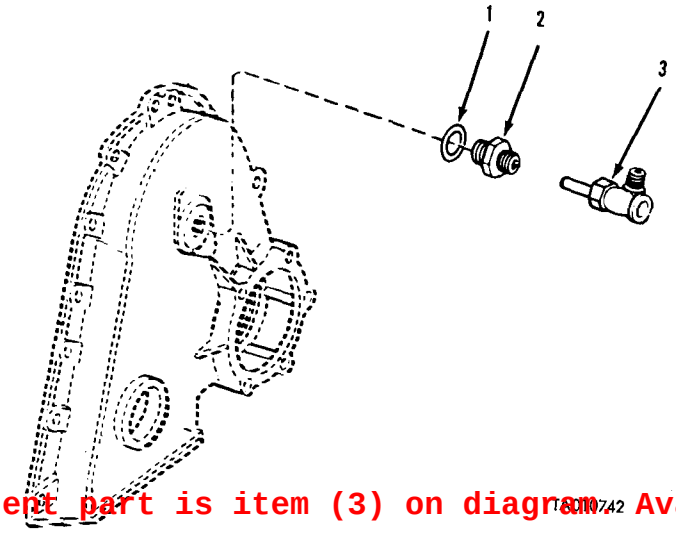

Current part is item (3) on diagram. Available at www.oshkoshequipmen

Figure 35. Tachometer Drive and Takeoff Adapters.

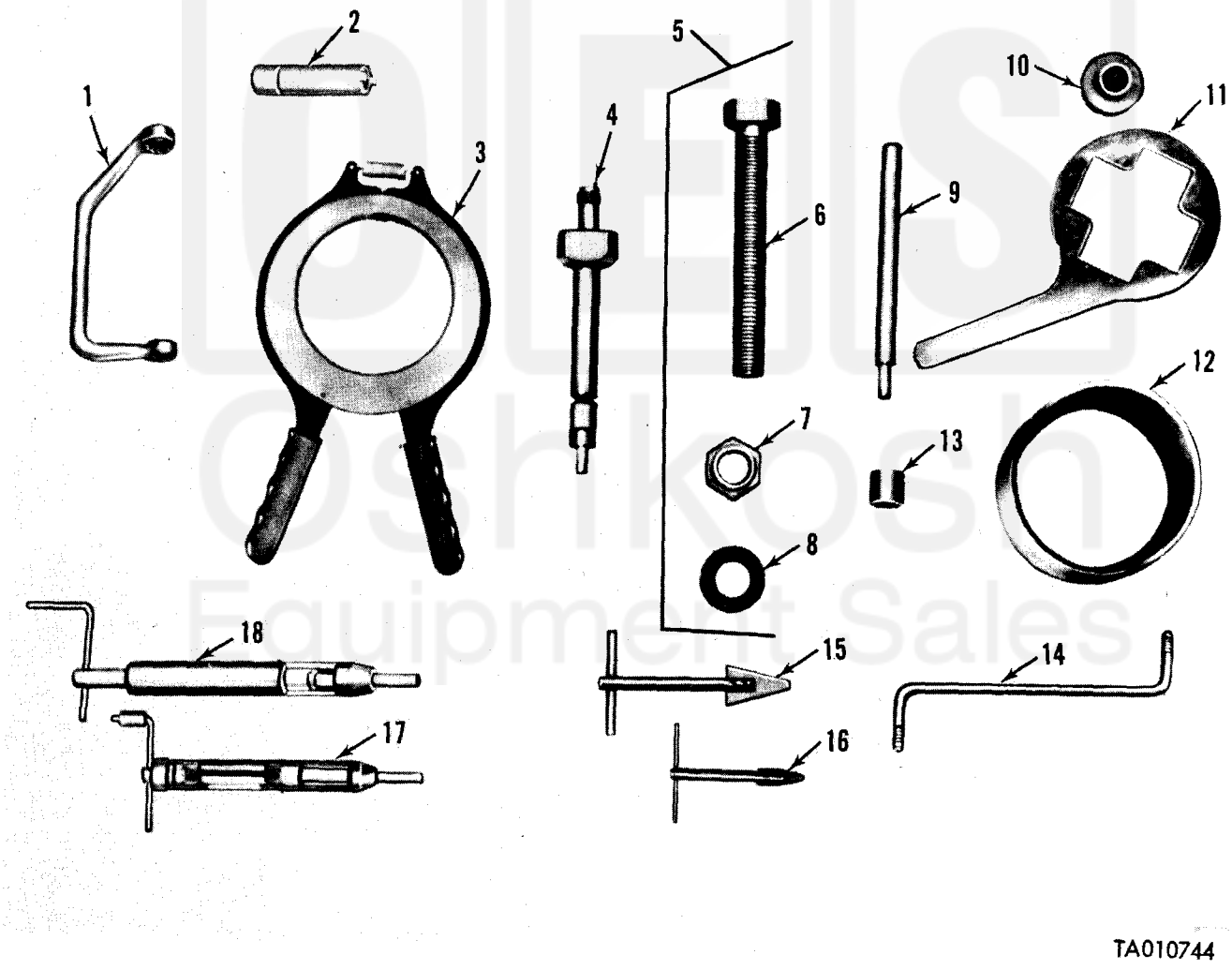

Figure 36. Special Tools.

Current part is item (3) on diagram. Available at www.oshkoshequipmen